SPHEROS-Parabus Ltd
Urusvuorenkatu 2
FI-20360 Turku
www.parabus.com

Assembly Instructions: 2M5 (500x500), 2M7 (675x780)

16 pcs-> 2M5
32 pcs-> 2M7
4,2 x 25 PH2

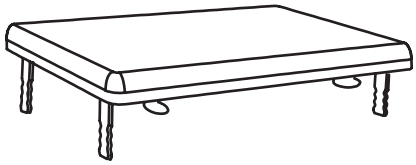

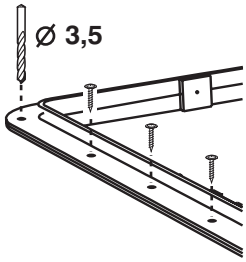

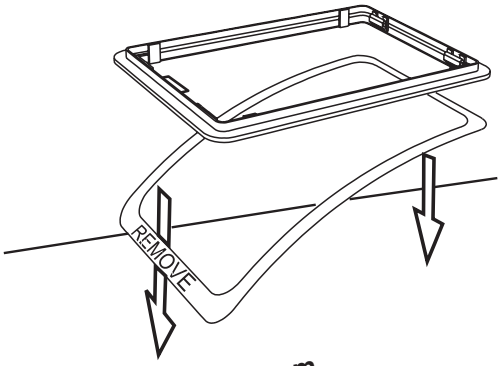

4,2 x 25 PH2

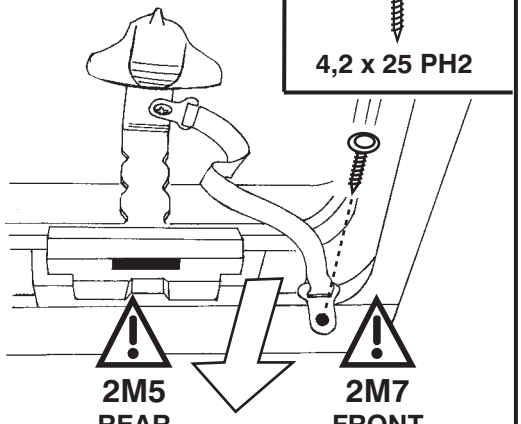

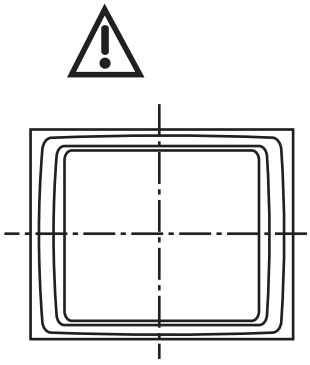

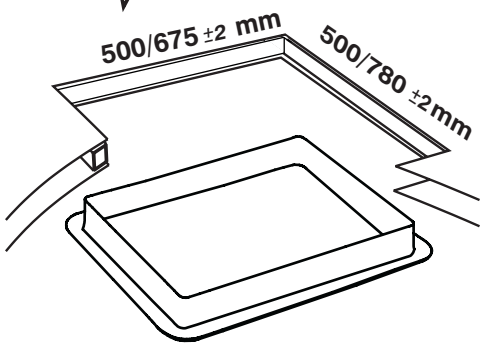

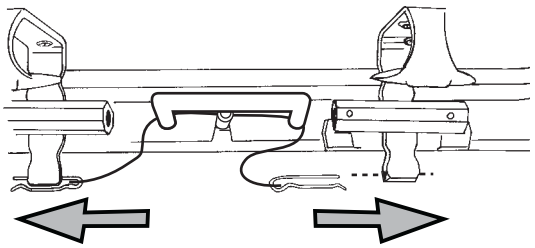
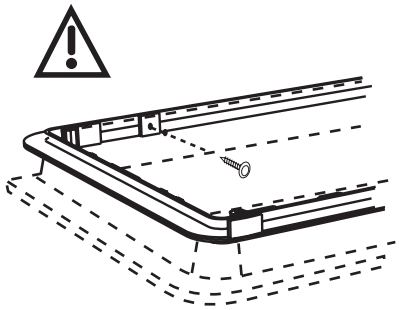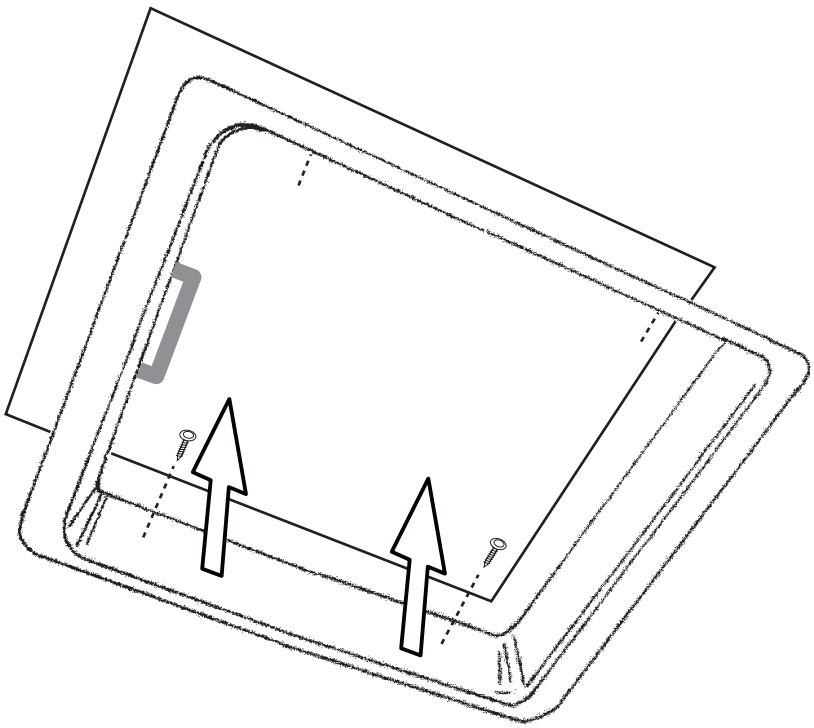
3,9 x 13 PH2 4 pcs