EMERGENCY ESCAPE VENTILATION HATCH

ELEON

INSTALLATION INSTRUCTIONS FOR ALL ELEON MODELS

1 TERMS AND CONDITIONS FOR HANDLING AND INSTALLATION

Handle the Eleon product with care. Don't lift product from glass edge cover.

Instructions are for flat roof. Assembly surfaces must be clean and dry. Ideal assembly temperature is 15°C - 25°C in 50% relative humidity.

The warranty is valid when installation is made according to these instructions.

Validated installation accessories NOT INCLUDED!

- Industrial scouring pad (e.g 3M Hand Pad 7447)
- Sika Aktivator
- Sika Primer
- Sikaflex
- Sika Nozzle 22565 to shape number 3
- Screwdriver
- Screws 6pcs (Pan Head self drilling 4,2 x 13)
- Spacers (if needed)

Roof cut off dimensions

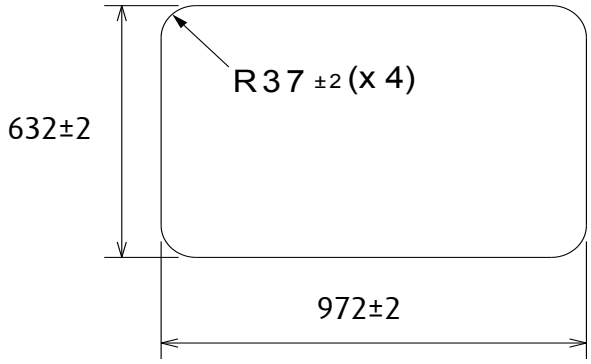

TABLE 1 Validated installation chemicals

	Preparation 1	Time (min)	Preparation 2	Time (min)	Glue	Working time (min)	Curing time (h)
OPTION 1	Sika Aktivator-100	10	Sika Primer-206 G+P	10	Sikaflex-221	45	24
OPTION 2	Sika Aktivator-100	10	Sika Primer-206 G+P	10	Sikaflex-268 PowerCure	30	2
OPTION 3	Sika Aktivator-100	10	Sika Primer-206 G+P	10	Sikaflex 521 UV	30	48
OPTION 4			Sika Primer-207	10	Sikaflex-221	45	24
OPTION 5			Sika Primer-207	10	Sikaflex-268 PowerCure	30	2
OPTION 6			Sika Primer-207	10	Sikaflex-521 UV	30	48
OPTION 7	Sika Aktivator-100	10	Sika Primer-207	10	Sikaflex-271 PowerCure	10	1

Valeo Thermal Commercial Vehicles Finland Ltd
Urusvuorenkatu 2 - FI-20360 TURKU - Tel. +358 2 436 60 00 - Fax +358 2 438 22 25
www.valeo-thermalbus.com

8600550F 3.5.2019

2 PREPARATION OF HATCH AND ROOF

1. Open the hatch
2. Degrease and clean the bonding surface
3. Light grinding for gluing surface
4. Remove dust from surface
5. Apply Sika Aktivator

6. Apply Sika Primer

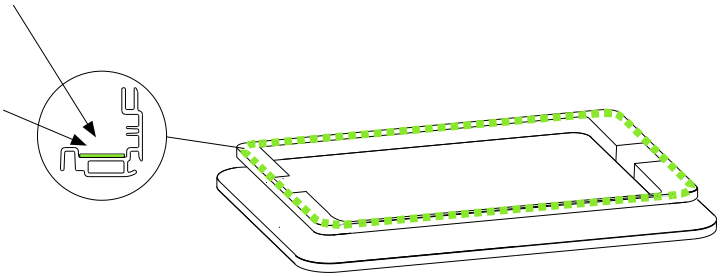

7. Follow the glue manufacturer's recommendations for the specific roof preparation.

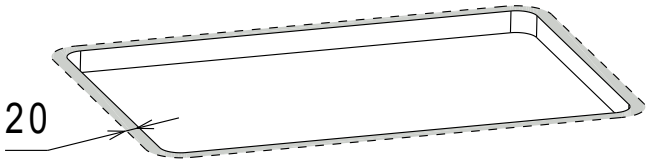

8.A For roofs from flat to radius 15 000.

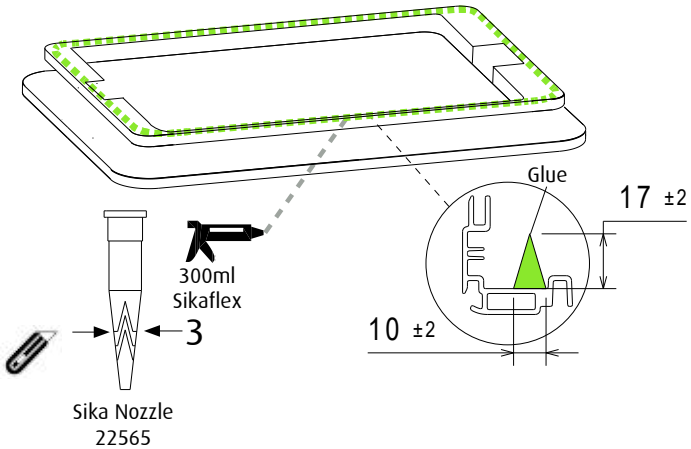

8.B For roof radius <15 000.

Roof radius (R)	Spacer height (H) mm	Glue thickness (T) mm
15 000	8	17
10 000	10	19
8 000	11	21
6 000	13,5	23

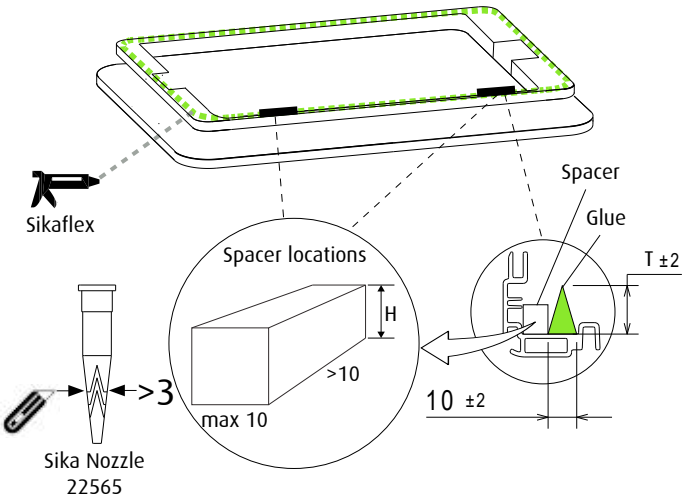

Glue working time SEE TABLE 1

Valeo Thermal Commercial Vehicles Finland Ltd
Urusvuorenkatu 2 - FI-20360 TURKU - Tel. +358 2 436 60 00 - Fax +358 2 438 22 25
www.valeo-thermalbus.com

3 INSTALLATION OF HATCH

Eleon plastic — Push evenly from outer frame

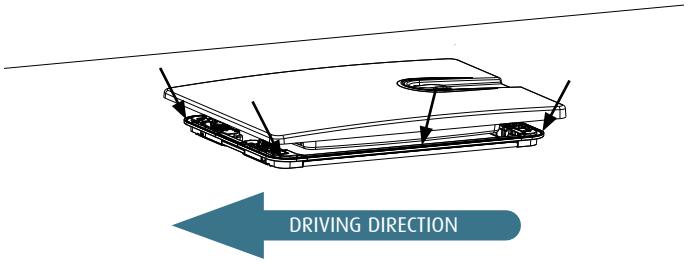

Eleon glass — Push evenly from outer frame

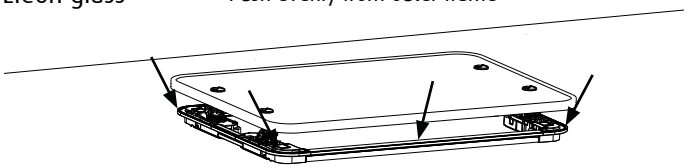

Control outer frame flatness! Do not bend!

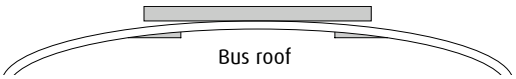

4 ELECTRICAL CONNECTIONS

NOTE! Only in Eleon Comfort models.

Make sure that the bus electrics are OFF. Connect the AMP connector with electrical control unit.

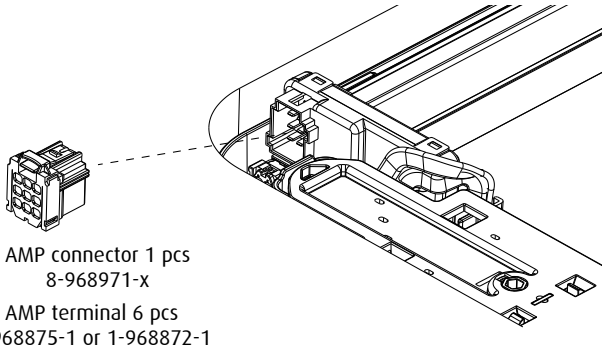

AMP connector 1 pcs
8-968971-x

AMP terminal 6 pcs
1-968875-1 or 1-968872-1

5 INSTALLATION OF INNER FRAME

A Installation immediately after bonding

1. Install the inner frame according to following instructions.
2. Close the roof hatch after installation.

B Installation later

1. Close the hatch.
2. When installation of the inner frame takes place, open hatch and follow these instructions.
3. Close the roof hatch after installation.

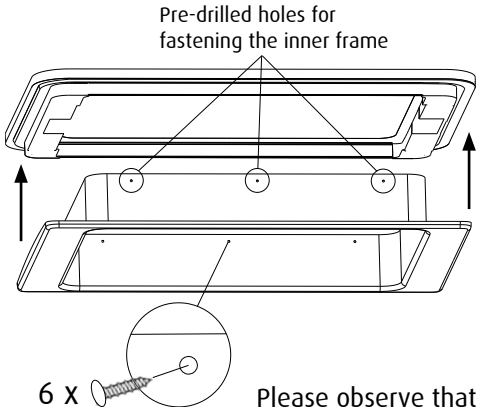

Screws are not included.
Recommended: Pan Head
self drilling 4,2 x 13
Recommended: Würth 0218413
Screws must be screwed to outer frame, not to the vehicle body

Please observe that regulation ECE R107.6 must be fulfilled!
(Emergency exit min 600mm x 700mm and min 450 000 mm²)

NOTE! During curing time of the glue, the roof hatch must be closed

6

Wait for specific time (see TABLE 1) in normal indoor conditions for the glue to cure before operating the roof hatch. (See the latest SIKA datasheet for instructions)

Please see the user manual for more information.

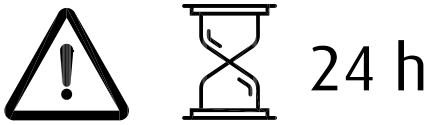

Valeo Thermal Commercial Vehicles Finland Ltd
Urusvuorenkatu 2 - FI-20360 TURKU - Tel. +358 2 436 60 00 - Fax +358 2 438 22 25
www.valeo-thermalbus.com

8600550F 3.5.2019